Romotop® SOLID R A

KERAMIKA
KERAMIK
CERAMIC

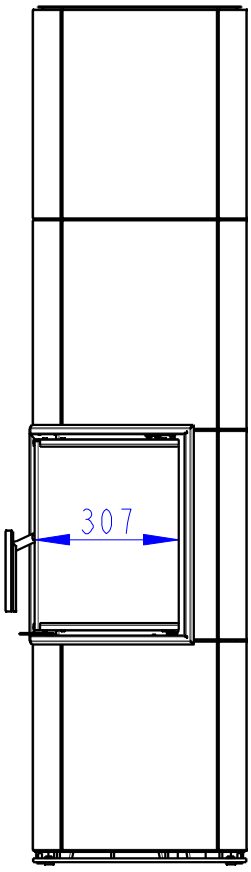

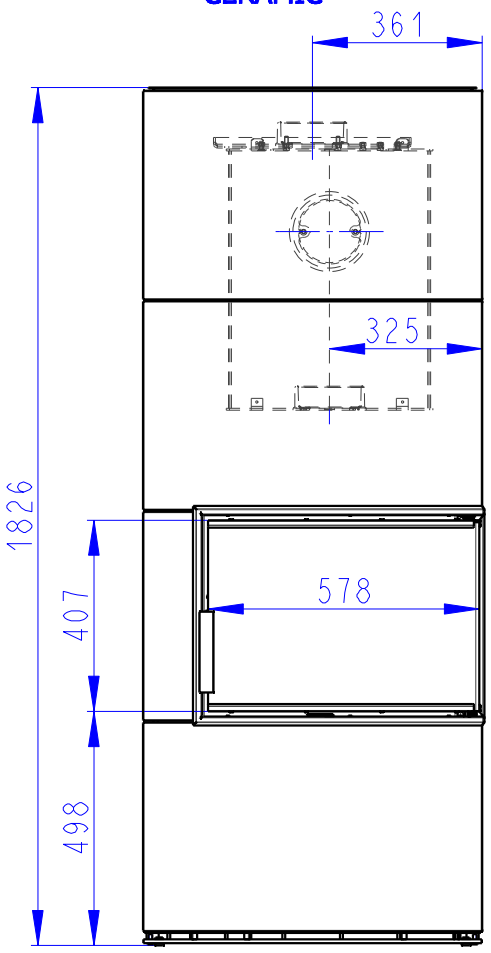

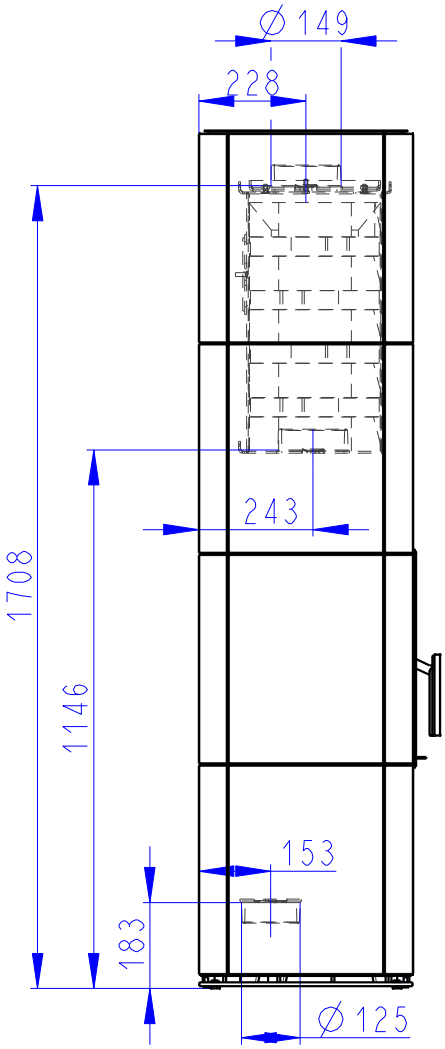

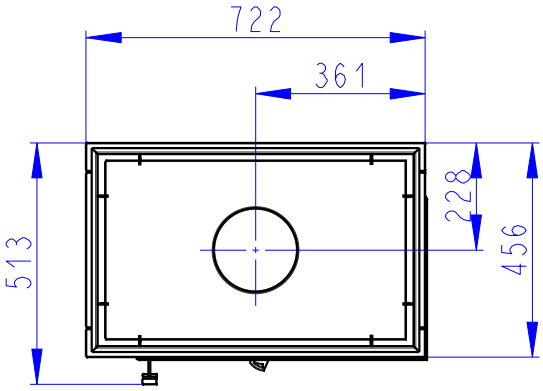

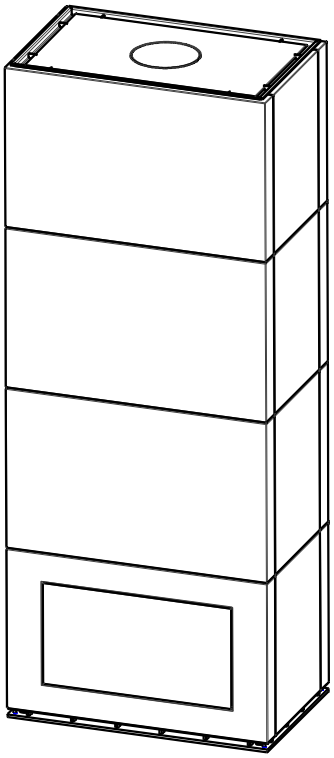

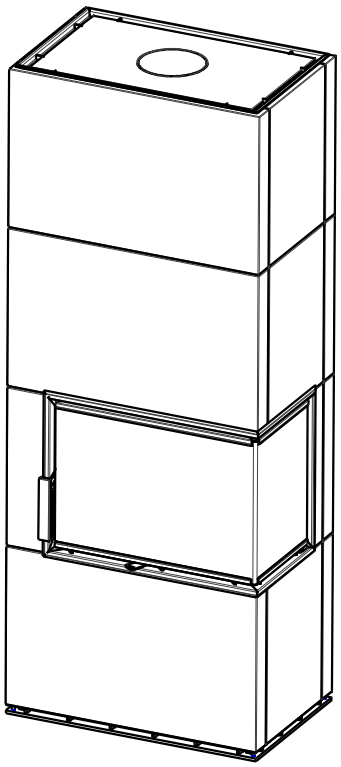

Romotop®

SOLID R A Z
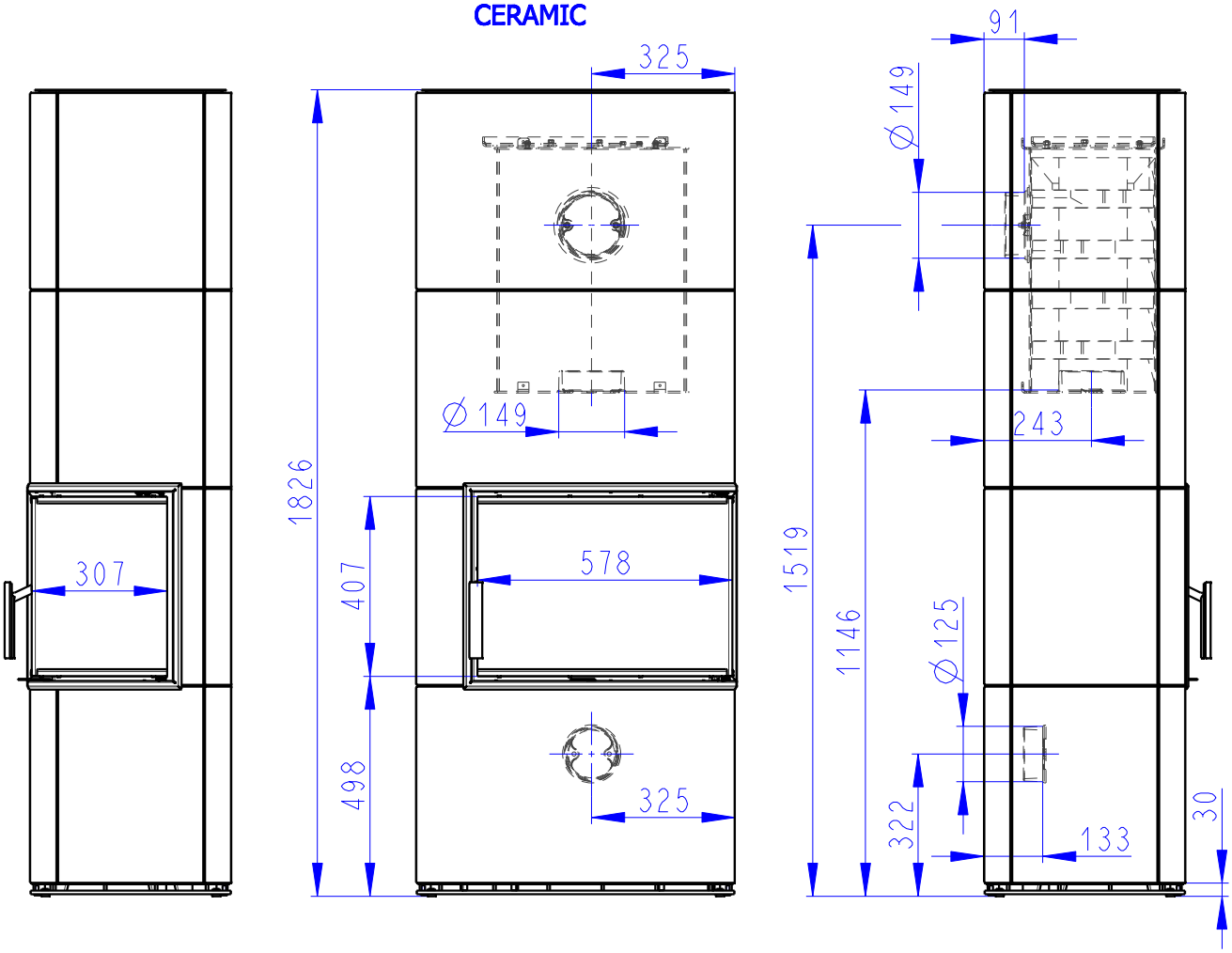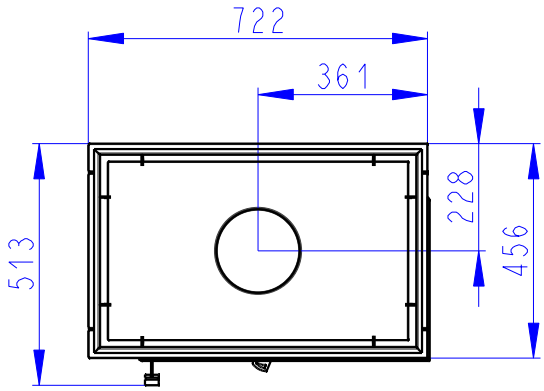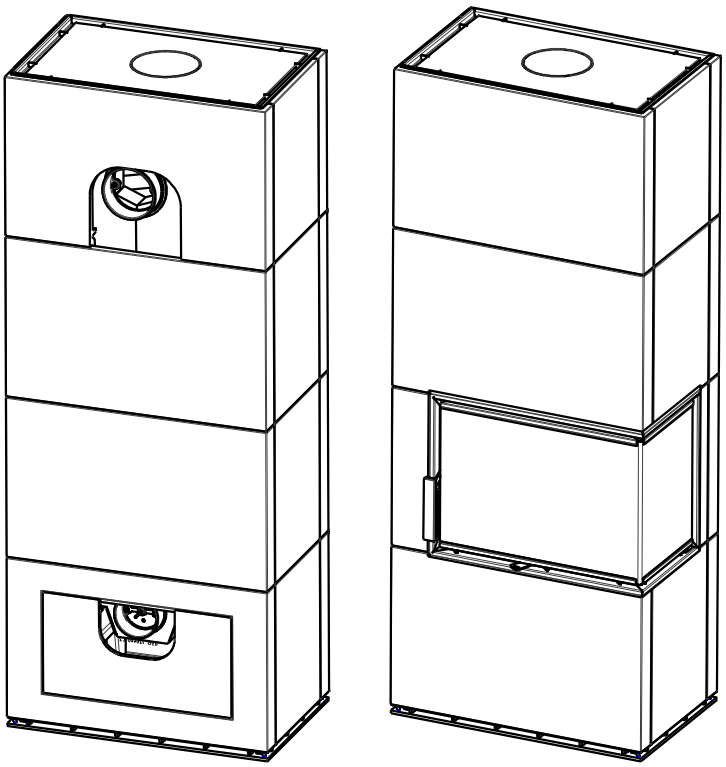
KERAMIKA
KERAMIK
CERAMIC