Romotop® SOLID FN A

KERAMIKA
KERAMIK
CERAMIC

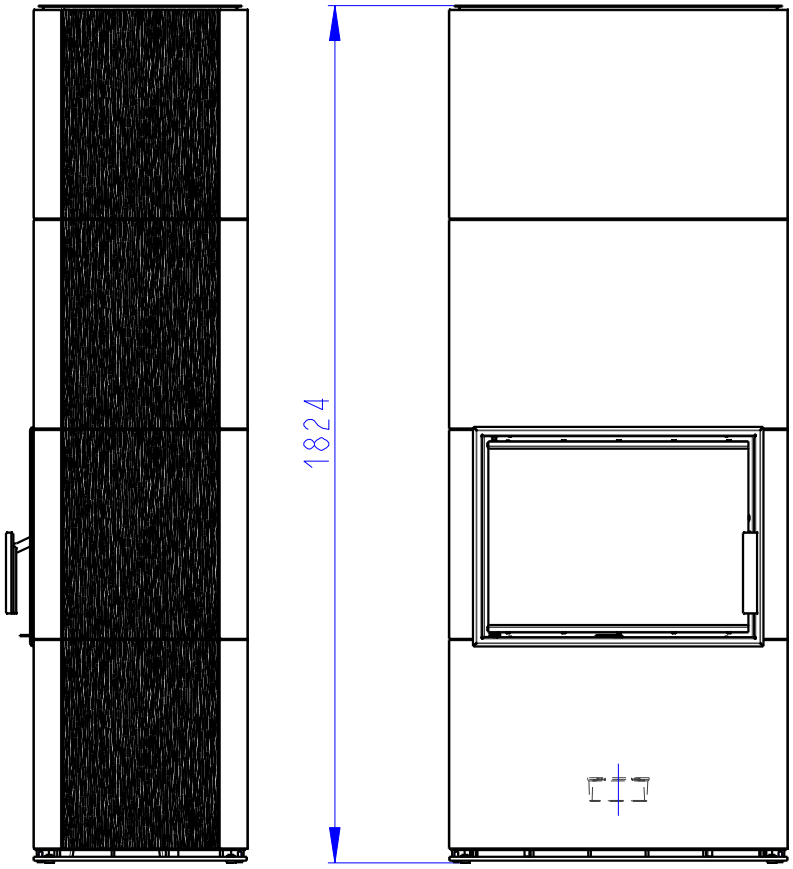

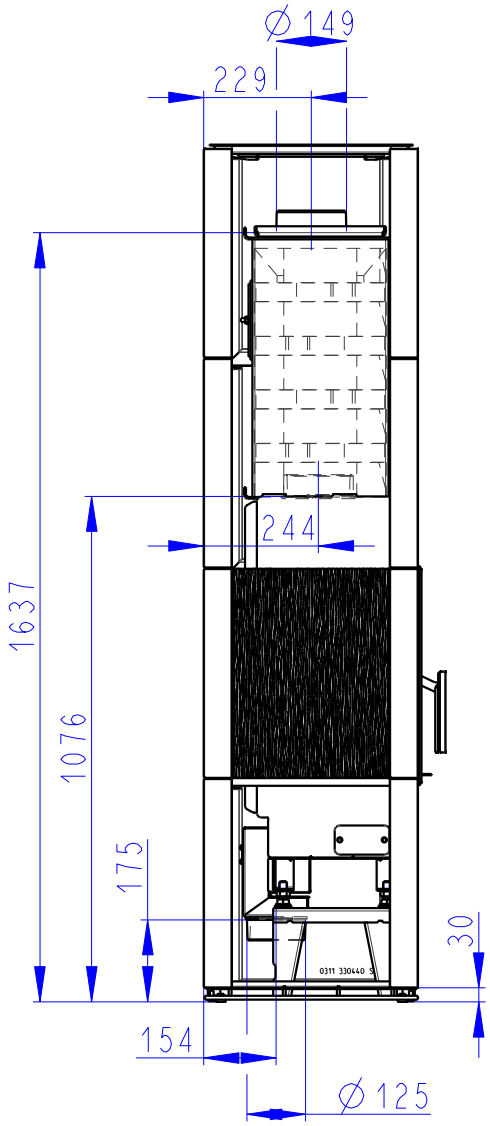

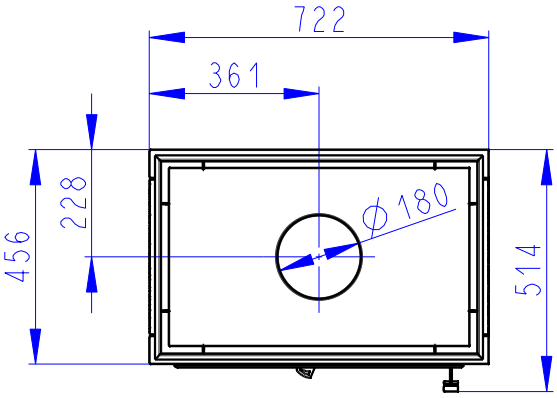

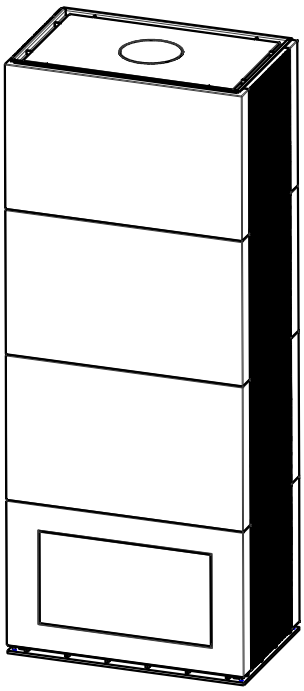

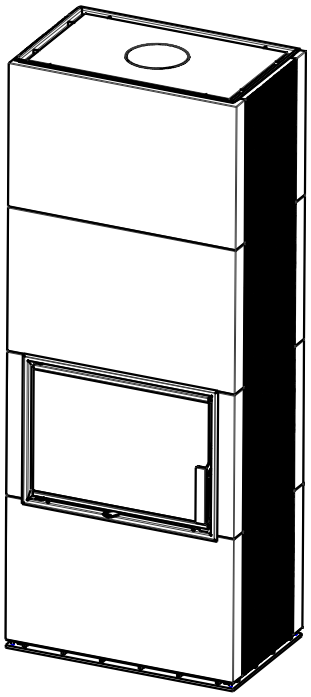

Romotop® SOLID FN A Z
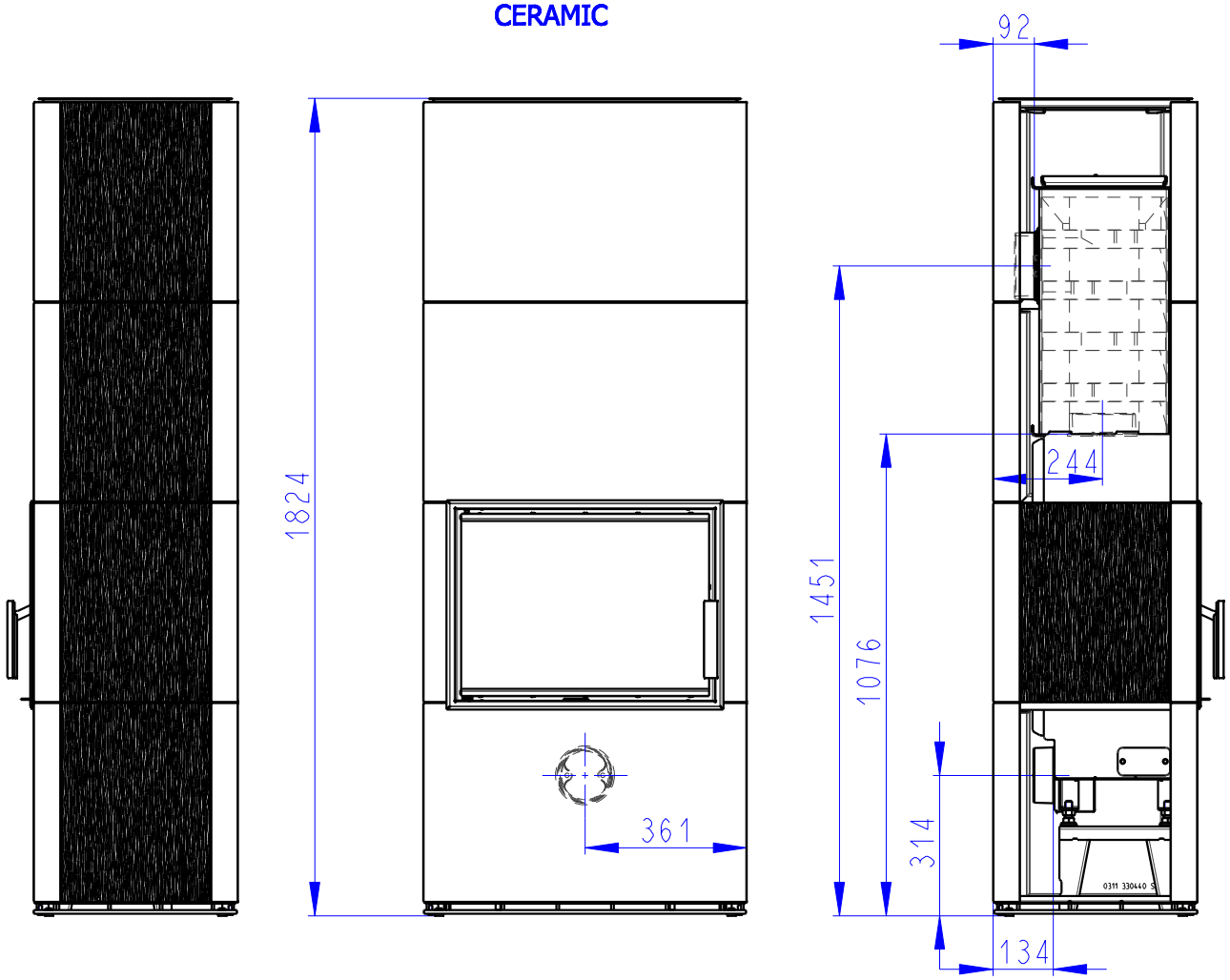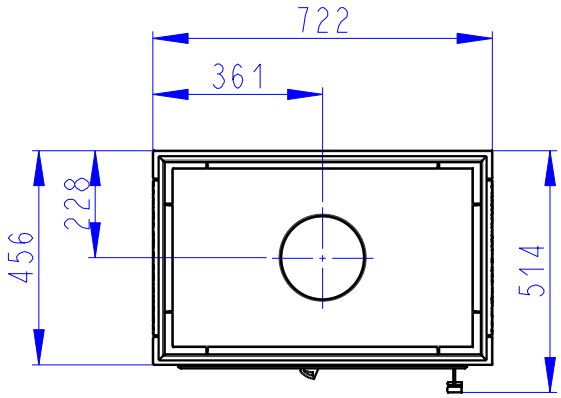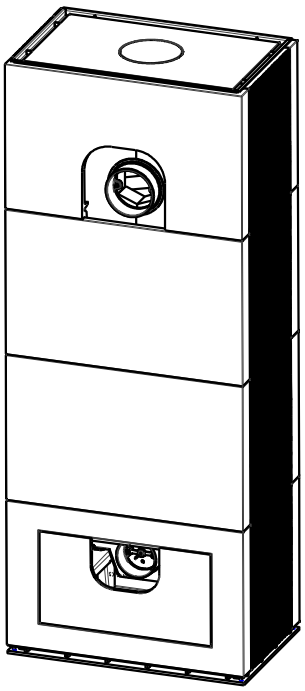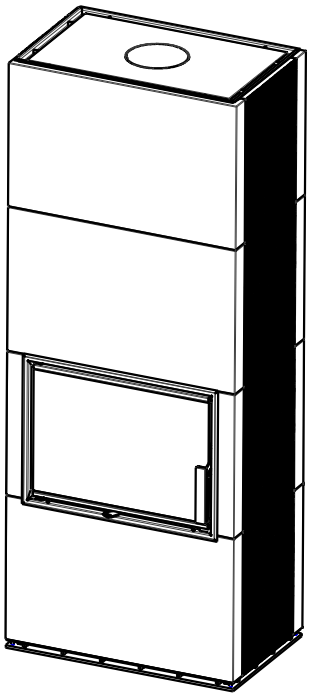
KERAMIKA
KERAMIK
CERAMIC