BARACCA 1N 0100

KERAMIKA
KERAMIK
CERAMIC

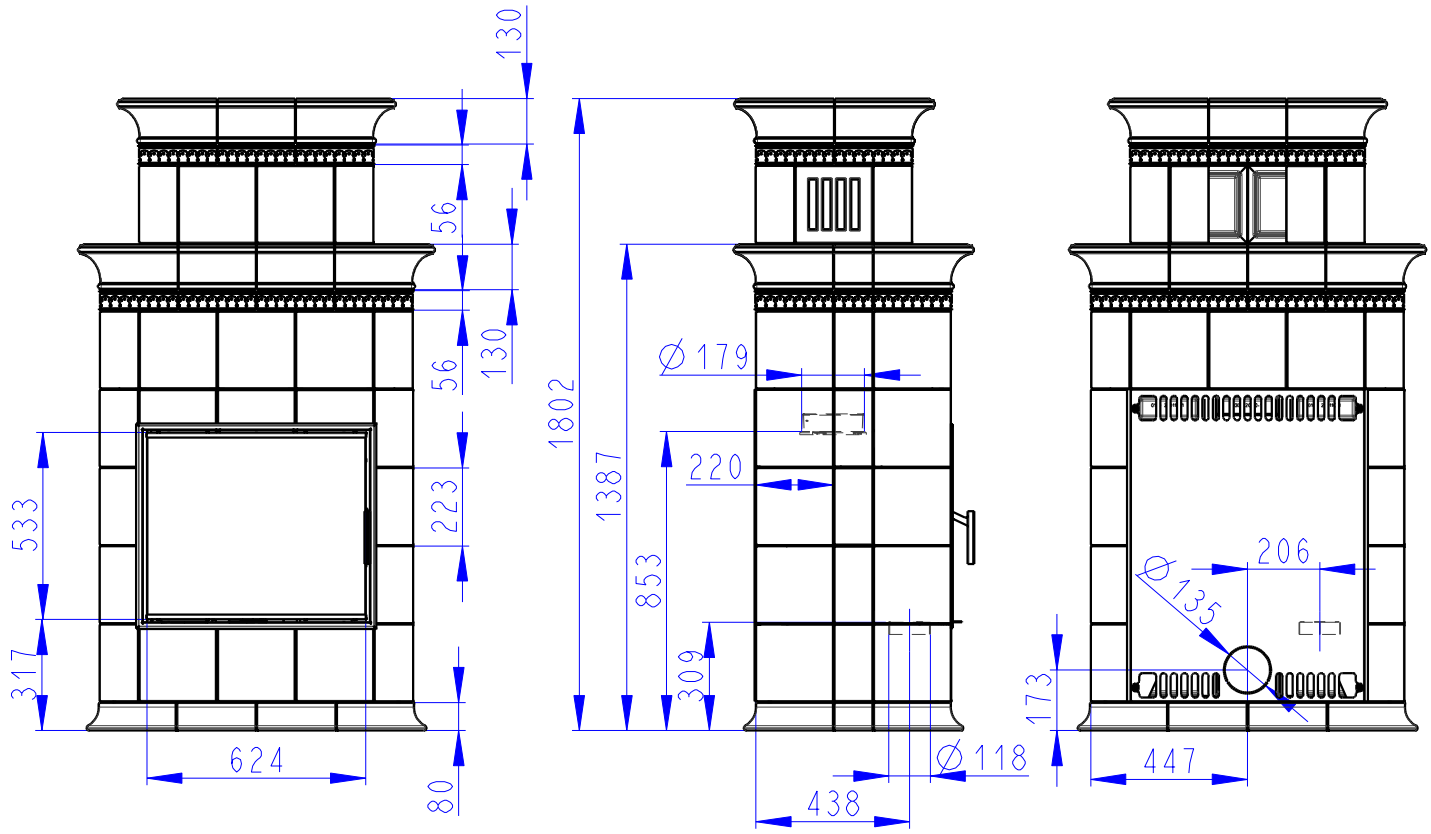

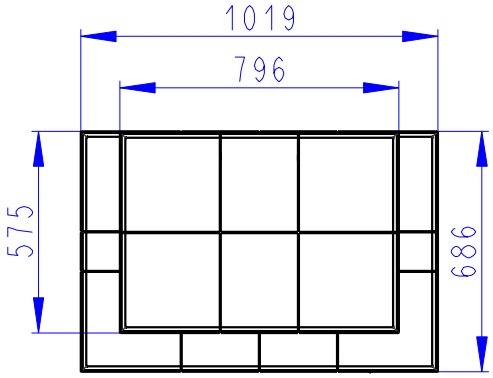

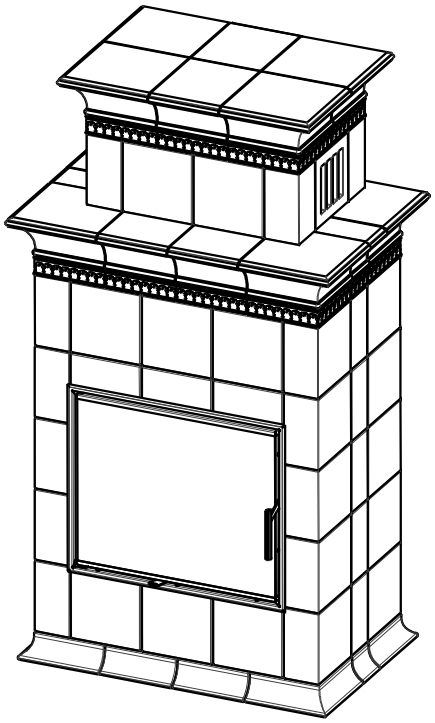

BARACCA 1N 0100
HORNI ODVOD SPALIN
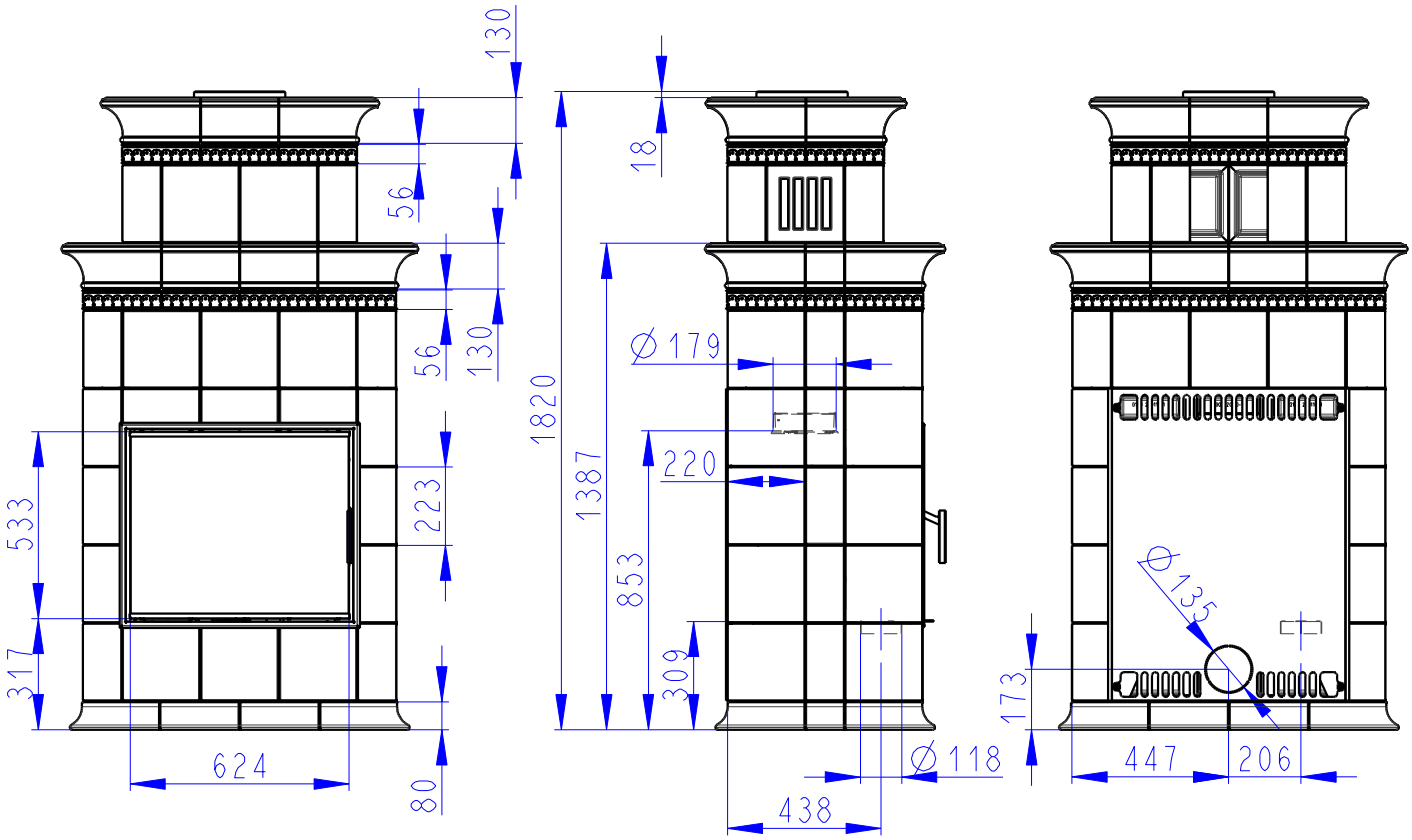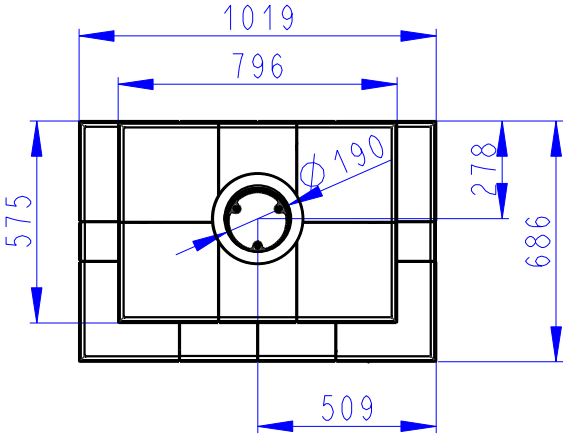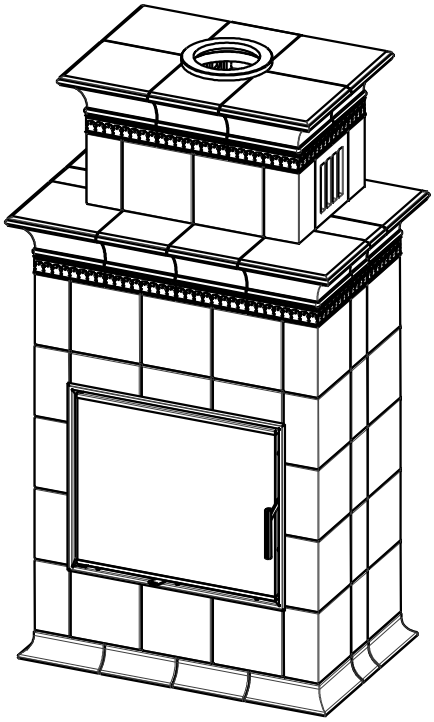
KERAMIKA
KERAMIK
CERAMIC